EV West
14 Pack 84S - Tesla Battery BMS

Revision 1.0 - May/2026

1 Enclosure, Series Wiring

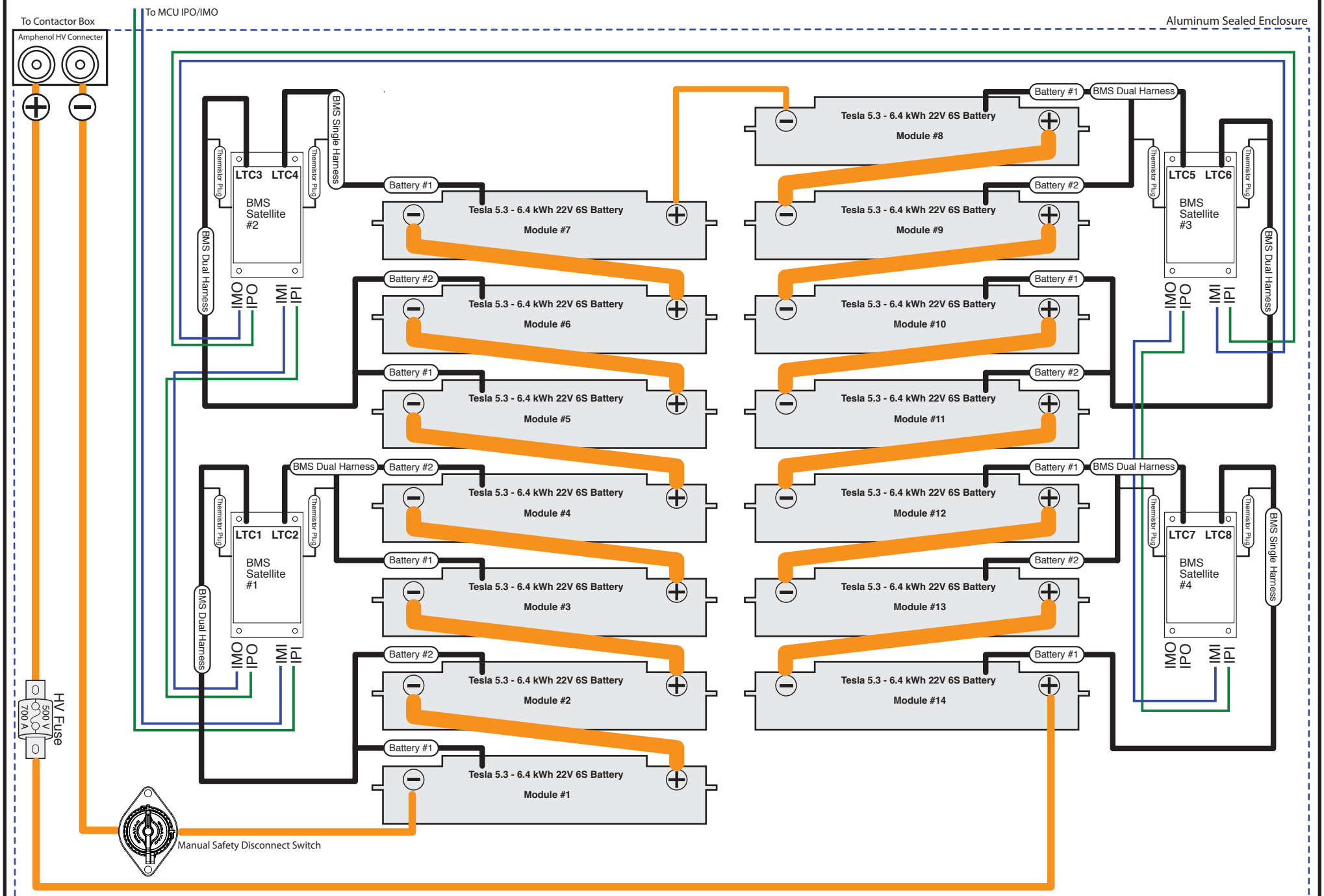

EV WEST